Series: **COMPACT-FAN Type D/DS**
EC-MOTOR
double inlet
with forward curved blades

FISCHBACH
Luft- und Ventilatorentechnik GmbH

Type: DS6-770/EM850

ErP KONFORM

CE -conform

manufacturer:
Fischbach Luft- und Ventilatorentechnik GmbH
Am Hellerberg 22-24
D-57290 Neunkirchen
phone: ++49(0)2735/777-0
telefax: ++49(0)2735/770-625
internet: www.fischbach-luft.de
email: info@fischbach-luft.de

Technical Data

weight:	(kg)	27
material housing:		steel, galvanized
material impeller:		steel, galvanized
direction of rotation:		left
protection class:		IP 65
insulation class:		F
motor protection:		thermal contact

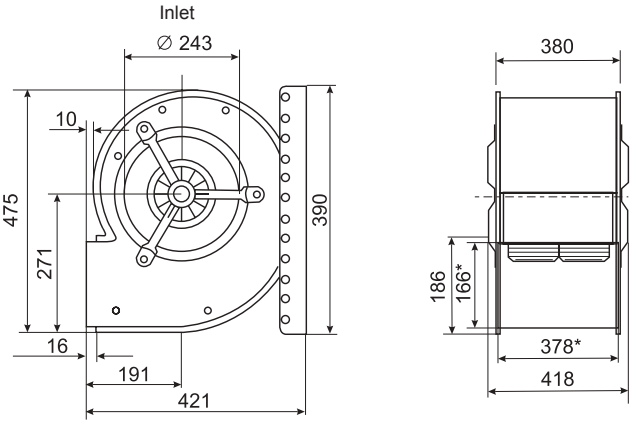

*external dimension of discharge

connection plan*
FFU-EC 230

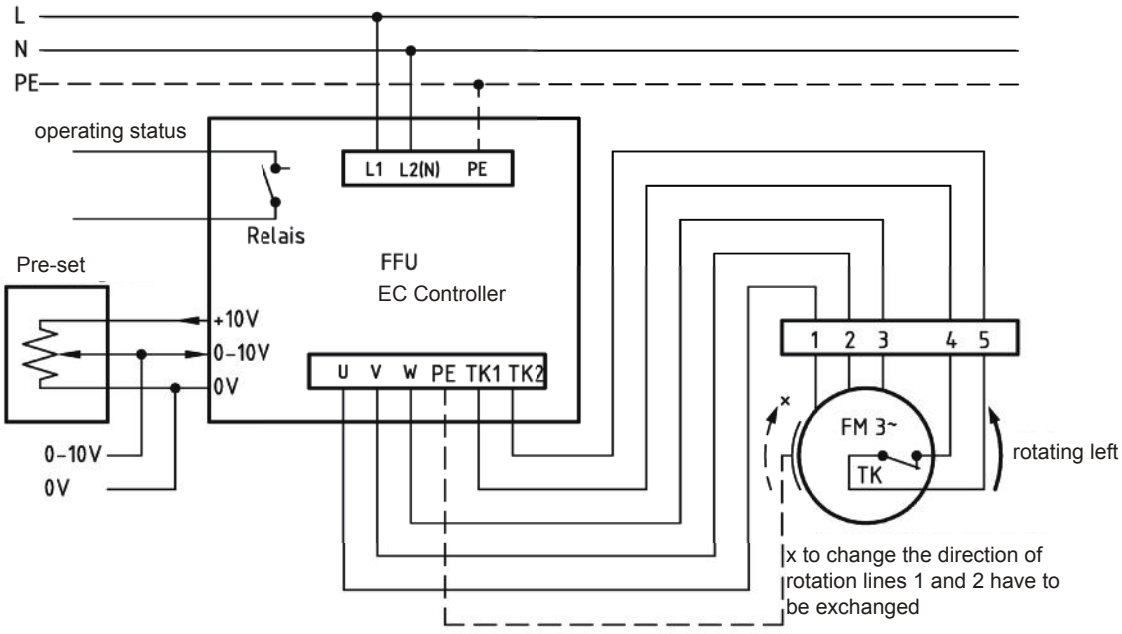

the silent one

* Connection only according to the enclosed technical documentation.

Series: **COMPACT-FAN Type D/DS**
EC-MOTOR
double inlet
with forward curved blades

FISCHBACH
Luft- und Ventilatorentechnik GmbH

Type: DS6-770/EM850

Erp 2013 2015 2018 **x**

Performance data

main voltage:	(V)	230 (1~)
frequency:	(Hz)	50
current max.:	(A)	9,6
power input max.:	(kW)	1,5
air flow volume max.:	(m³/h)	5167
statical pressure max.:	(Pa)	493
speed max.:	(rpm)	1350
supply air temperature:	(°C)	-25... +45
capacitor:	(µF)	-

ErP-Data:

total efficiency fan (η_e):	(%)	48,3
installation category:		A
efficiency category:		static
efficiency grade: N	(%)	42
target efficiency (η_{target}):	(%)	41,1
speed controller		yes
year of manufacturing		since 2015

manufacturer: Fischbach Luft- und Ventilatorentechnik GmbH
D-57290 Neunkirchen / HRB 5804 Siegen

order no.		18116250
power input:	(kW)	0,86
air flow volume:	(m³/h)	2915
statical pressure:	(Pa)	470
speed:	(rpm)	1350
specific ratio:		1

disassemling/recycling/disposal: see page decommission
installation/operation/maintenance: see operating and mounting instructions
measurement for determination of efficiency without additional items

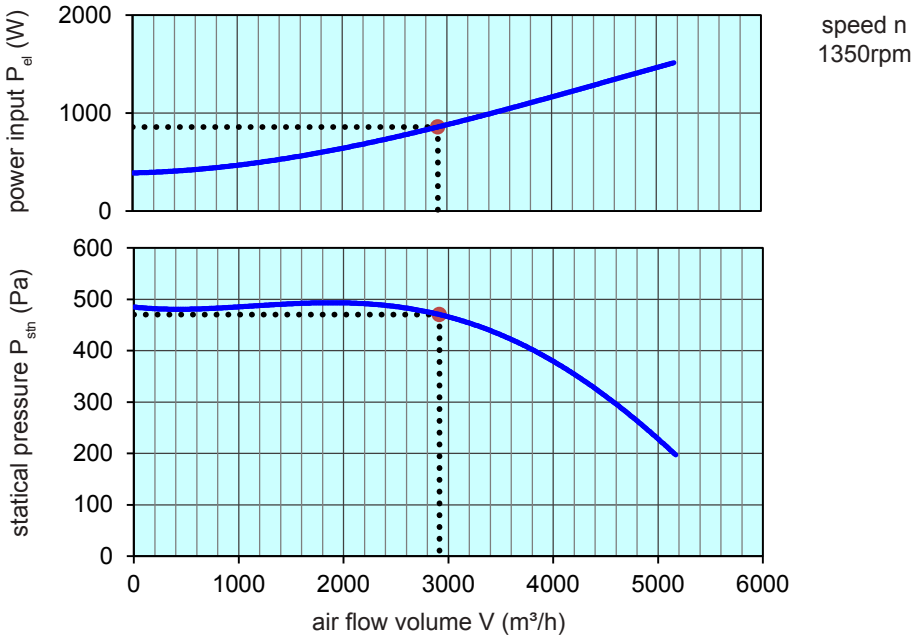

control with	type	**order-Nr.**
FISCHBACH-frequency-converter	FFU1-21-2.2	**63720**
FISCHBACH-Pre-set 0-10V (optional accessories)	FS 10	**69460**

Technical documentation according to page: **General information**